PRODUCT INFO

HÄFELE

# PROFIN ALUMINIUM PROFILES

- *Horizontal & Vertical Gola Profiles*
- *Stack Modular Shelving*
- *Rail Door Profiles*
- *Strike Shelving System*

## PROFIN RANGE OF ALUMINIUM PROFILES

Gone are the days when kitchens had dedicated rooms which were only used for daily chores like cooking and washing. With the on-going migration into urban centres the concept of micro-living as a trend is now gaining importance among city dwellers. Separating walls disappear, living spaces merge. These spaces flow into each other and therefore integrating family and living space with kitchens remains a very popular design option especially in upcoming cities.

An open kitchen layout comes with multiple advantages. It transforms your kitchen into the pulsating hub of your home enabling easy conversations between your guests and you as you cook and prepare dishes. It also adds a sense of volume to your kitchen. With this layout the kitchen and its cabinetry need to not only look immaculate but should also carry an individualistic appeal which blurs the lines of distinction between your living spaces. Häfele presents *Profin* - a new comprehensive range of state-of-the-art Aluminium Profiles that helps you achieve all this and much more. The range consists of four different categories of profiles – *Gola Profiles, Stack Modular Shelving, Rail Door Profiles and Strike Shelving System*. These categories exploit an individual's sense of sophistication by proposing exciting design potentials and flawless integration. These profiles are manufactured using advanced technology with meticulous precision that augments user-friendliness and ensures utmost ease of installation.

## FINISHES:

The Profin Range of Aluminium Profiles and their accessories, across categories, are available in five contemporary finishes - Silver, Graphite, Gold, Rose Gold and Dark Bronze. Whether you opt for a dark kitchen or follow the recent trend of adapting metallic hues, our versatile range of profiles blends in perfectly with all colour schemes. When used in contrast, they stand out like jewelled embellishments that radiate across the kitchen.

Silver

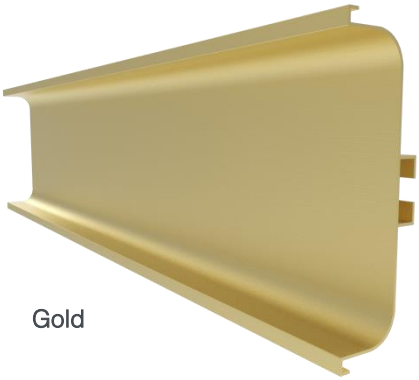

Gold

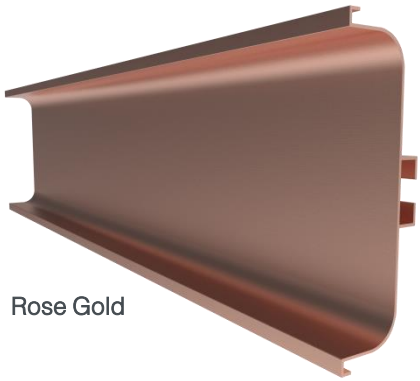

Rose Gold

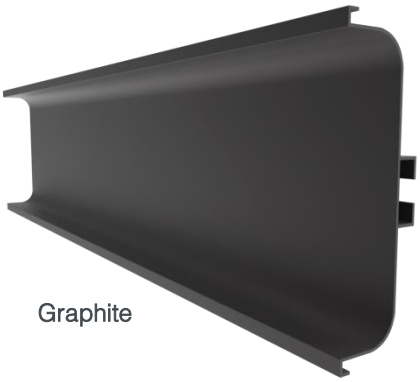

Graphite

Dark Bronze

HÄFELE

## PROFIN : ONE RANGE. MANY SOLUTIONS.

2. Stack Modular Shelving | Pg. 23 - 32

3. Rail Door Profiles | Pg. 33 - 41

1. Gola Profiles | Pg. 4 - 22

4. Strike Shelving System | Pg. 42 - 49

# GOLA PROFILES

## *For Handle-less Furniture Application*

Extensive surfaces, straight-cut designs and handle-less fronts – these furniture developments are trending. Häfele's Profin Range of Aluminium Profiles offers its diverse assortment of Gola Profiles which, thanks to its versatility, makes it possible to satisfy every aesthetic and construction need of contemporary kitchens. You can achieve a seamless handle-less kitchen cabinetry construction with our new Horizontal and Vertical Gola Profiles. The installation of these profiles is extremely simple and easy due to the inventive fastening system.

HÄFELE
ride
the
bike

Officina
Maschera Teatro
I Sgorbi

HÄFELE

HÄFELE

# HORIZONTAL GOLA PROFILE

# HORIZONTAL GOLA PROFILE

Silver

Graphite

Gold

Rose Gold

Dark Bronze

# HORIZONTAL GOLA PROFILE

## APPLICATION

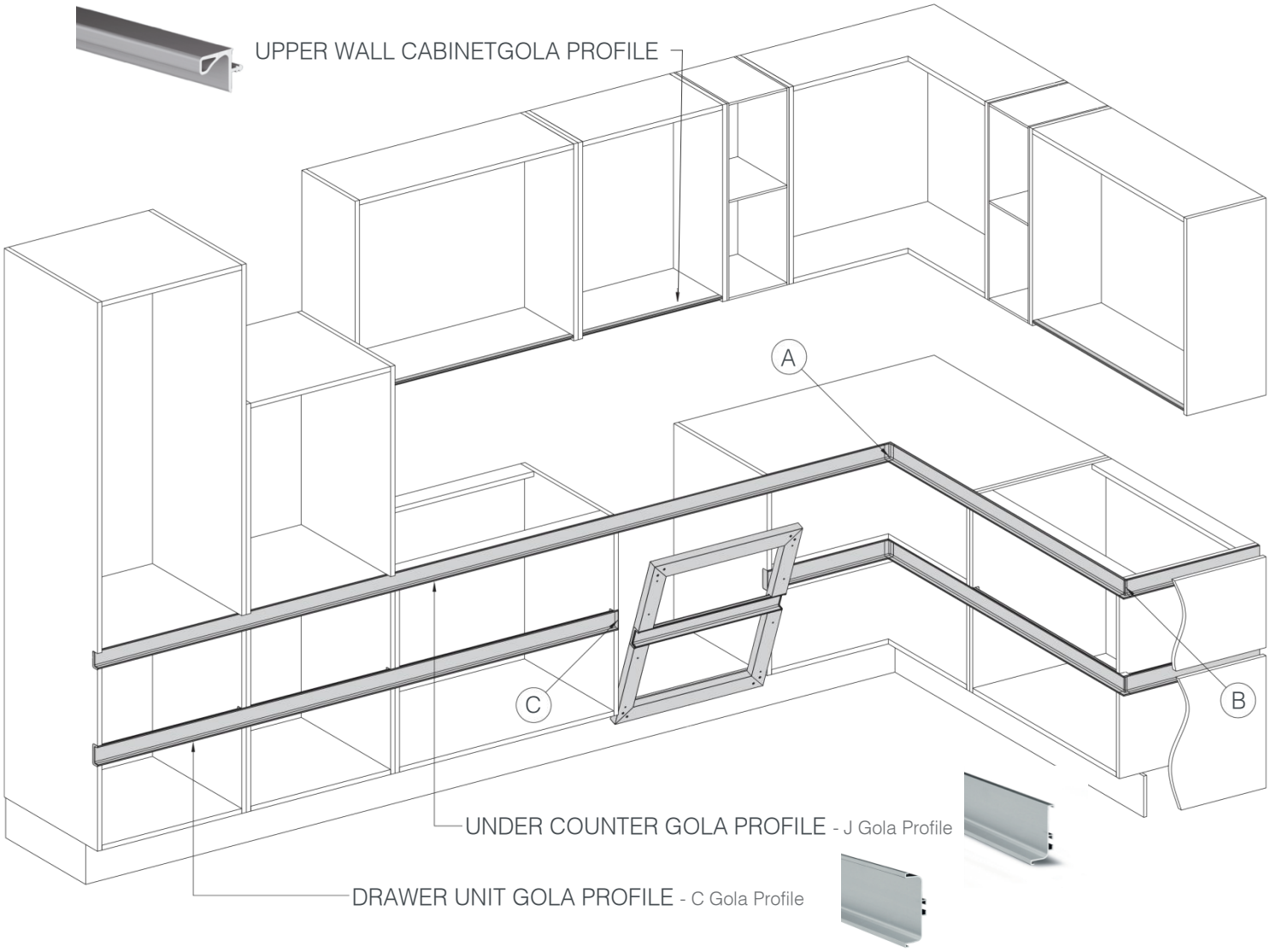


A INTERNAL CORNER CONNECTORS

90˚ Internal Corner Connectors (Aluminium)

90˚ Internal-External Corner Connectors (Plastic)

B EXTERNAL CORNER CONNECTORS

90˚ External Corner Connectors (Aluminium)

90˚ Internal-External Corner Connectors (Plastic)

C TRIM CAPS

Internal-External End Caps

# HORIZONTAL GOLA PROFILE

## UNDERCOUNTER GOLA PROFILE

- *J Gola Profile*

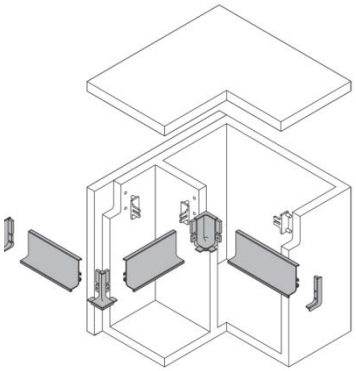

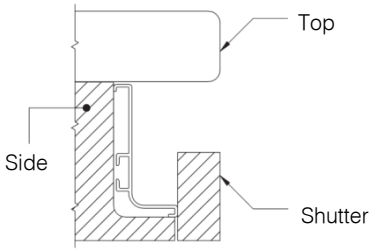


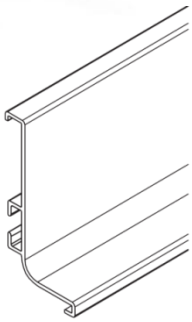

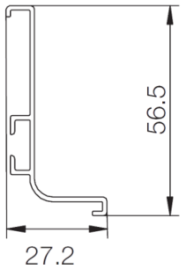


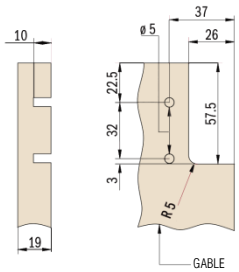


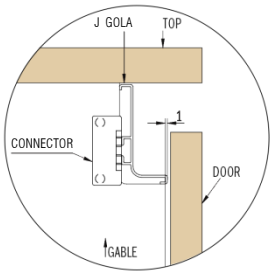


| Article no. | 126.37.902 | 126.37.903 | 126.37.904 | 126.37.906 | 126.37.909 |
|---|---|---|---|---|---|
| Finish | Silver | Graphite | Gold | Rose Gold | Dark Bronze |
| Material | Aluminium | | | | |
| Length | 3000 mm; Usable Length: 2800 mm | | | | |
| MRP (INR) | 2,250/- | 2,500/- | 5,000/- | 5,000/- | 5,000/- |

Unit: Piece

## ACCESSORIES FOR J GOLA PROFILE

- 90˚ Internal Corner Connector - J Gola Profile

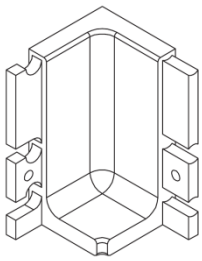

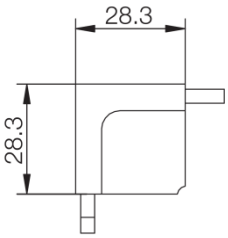


| Article no. | 126.36.946 | 126.36.781 | 126.36.581 | 126.36.881 | 126.36.181 |
|---|---|---|---|---|---|
| Finish | Silver | Graphite | Gold | Rose Gold | Dark Bronze |
| Material | Aluminium (carved out of a single Aluminium block) | | | | |
| Instruction | No mitre cut (45˚) is required for connecting with the profiles | | | | |
| MRP (INR) | 2,500/- | 2,500/- | 3,300/- | 3,300/- | 3,300/- |

Unit: Piece

# HORIZONTAL GOLA PROFILE

- 90˚ External Corner Connector - J Gola Profile

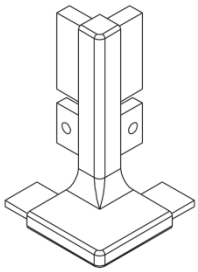
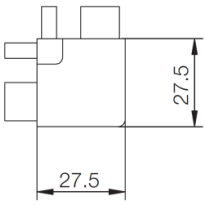


| Article no. | 126.36.945 | 126.36.782 | 126.36.582 | 126.36.882 | 126.36.182 |
|---|---|---|---|---|---|
| Finish | Silver | Graphite | Gold | Rose Gold | Dark Bronze |
| Material | Aluminium (carved out of a single Aluminium block) | | | | |
| Instruction | No mitre cut (45˚) is required for connecting with the profiles | | | | |
| MRP (INR) | 2,500/- | 2,500/- | 3,200/- | 3,200/- | 3,200/- |

Unit: Piece

- 90˚ Internal-External Corner Connector - J Gola Profile

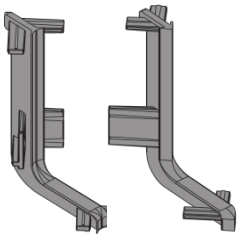
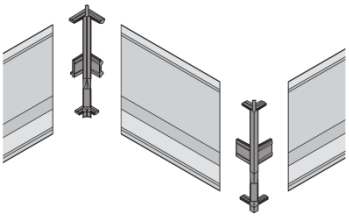
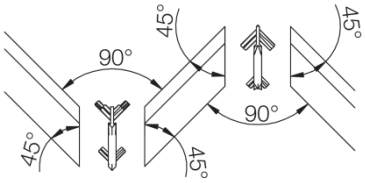


| Article no. | 126.37.716 | 126.37.717 | 126.37.718 | 126.37.719 | 126.37.715 |
|---|---|---|---|---|---|
| Finish | Silver | Graphite | Gold | Rose Gold | Dark Bronze |
| Material | Plastic | | | | |
| Instruction | Aluminium profiles have to be mitered (45˚) to use these connectors | | | | |
| MRP (INR) | 375/- | 375/- | 550/- | 550/- | 550/- |

Unit: Pair

- Trim Caps - J Gola Profile

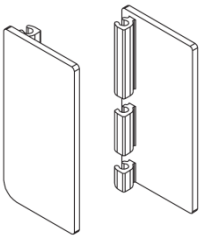
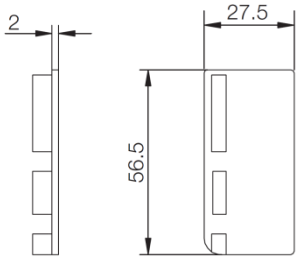

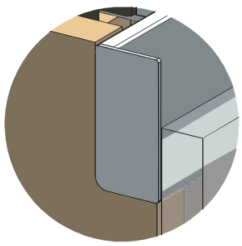

| Article no. | 126.36.947 | 126.36.780 | 126.36.580 | 126.36.880 | 126.36.180 |
|---|---|---|---|---|---|
| Finish | Silver | Graphite | Gold | Rose Gold | Dark Bronze |
| Material | Aluminium | | | | |
| MRP (INR) | 1,950/- | 1,950/- | 2,500/- | 2,500/- | 2,500/- |

Unit: Pair

# HORIZONTAL GOLA PROFILE

## DRAWER UNIT GOLA PROFILE

- *C Gola Profile*

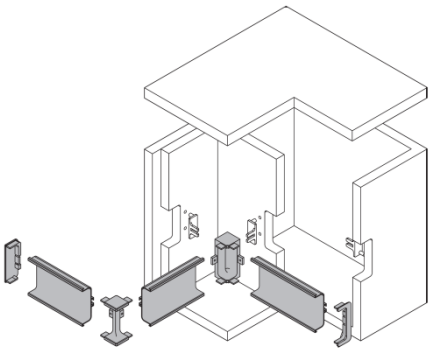

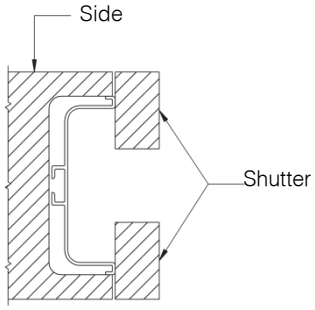


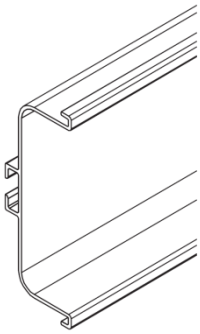

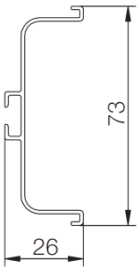

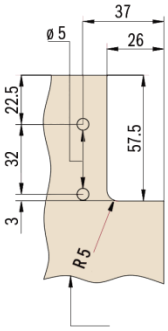


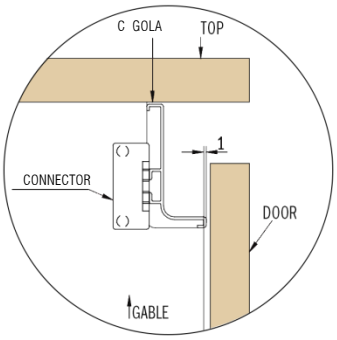


| Article no. | 126.37.926 | 126.37.927 | 126.37.928 | 126.37.929 | 126.37.925 |
|---|---|---|---|---|---|
| Finish | Silver | Graphite | Gold | Rose Gold | Dark Bronze |
| Material | Aluminium | | | | |
| Length | 3000 mm; Usable Length: 2800 mm | | | | |
| MRP (INR) | 2,750/- | 3,200/- | 6,200/- | 6,200/- | 6,200/- |

Unit: Piece

## ACCESSORIES FOR C GOLA PROFILE

- 90˚ Internal Corner Connector – C Gola Profile

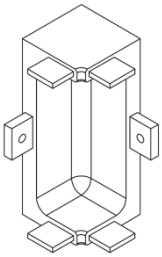

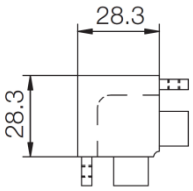


| Article no. | 126.36.985 | 126.36.784 | 126.36.584 | 126.36.884 | 126.36.184 |
|---|---|---|---|---|---|
| Finish | Silver | Graphite | Gold | Rose Gold | Dark Bronze |
| Material | Aluminium (carved out of a single Aluminium block) | | | | |
| Instruction | No mitre cut (45˚) is required for connecting with the profiles | | | | |
| MRP (INR) | 2,800/- | 2,800/- | 3,600/- | 3,600/- | 3,600/- |

Unit: Piece

# HORIZONTAL GOLA PROFILE

- 90˚ External Corner Connector - C Gola Profile

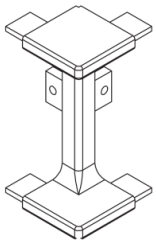
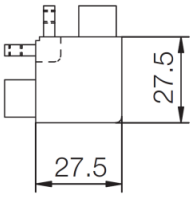


| Article no. | 126.37.916 | 126.37.917 | 126.37.918 | 126.37.919 | 126.37.915 |
|---|---|---|---|---|---|
| Finish | Silver | Graphite | Gold | Rose Gold | Dark Bronze |
| Material | Aluminium (carved out of a single Aluminium block) | | | | |
| Instruction | No mitre cut (45˚) is required for connecting with the profiles | | | | |
| MRP (INR) | 2,800/- | 2,800/- | 3,600/- | 3,600/- | 3,600/- |

Unit: Piece

- 90˚ Internal-External Corner Connector - C Gola Profile

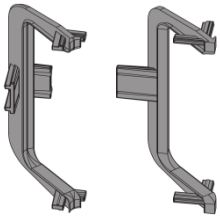
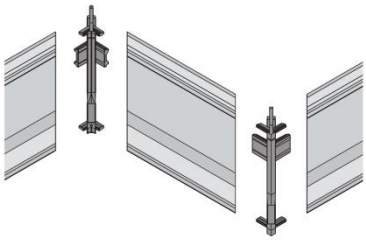
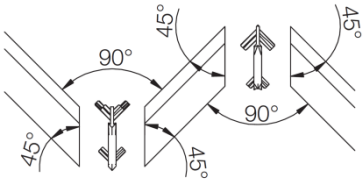


| Article no. | 126.37.726 | 126.37.727 | 126.37.728 | 126.37.729 | 126.37.725 |
|---|---|---|---|---|---|
| Finish | Silver | Graphite | Gold | Rose Gold | Dark Bronze |
| Material | Plastic | | | | |
| Instruction | Aluminium profiles have to be mitered (45˚) to use these connectors | | | | |
| MRP (INR) | 375/- | 375/- | 550/- | 550/- | 550/- |

Unit: Pair

- Trim Caps - C Gola Profile

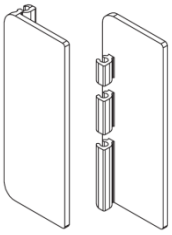
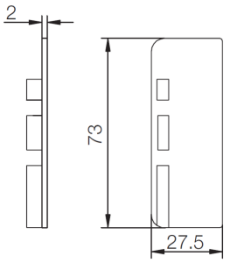

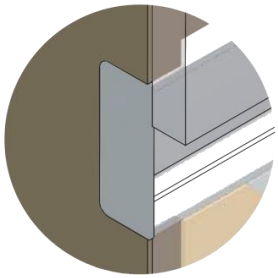

| Article no. | 126.36.986 | 126.36.783 | 126.36.583 | 126.36.883 | 126.36.183 |
|---|---|---|---|---|---|
| Finish | Silver | Graphite | Gold | Rose Gold | Dark Bronze |
| Material | Aluminium | | | | |
| MRP (INR) | 2,000/- | 2,000/- | 2,500/- | 2,500/- | 2,500/- |

Unit: Pair

# HORIZONTAL GOLA PROFILE

## *Quick Support Connector for J & C Gola Profiles*

Screw On

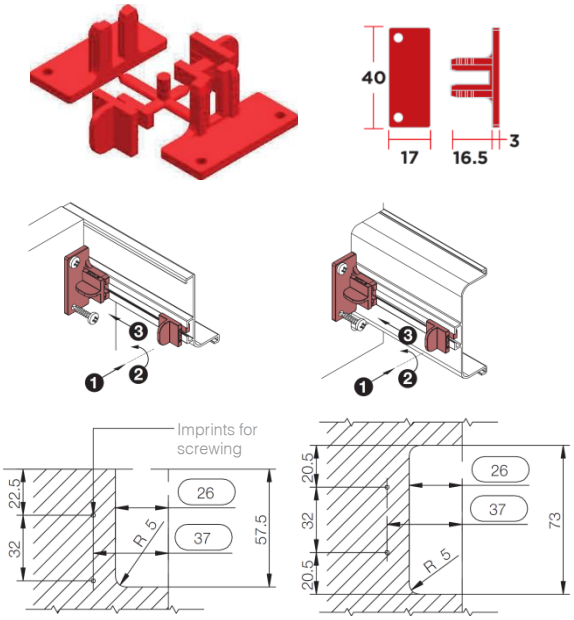


Dowel

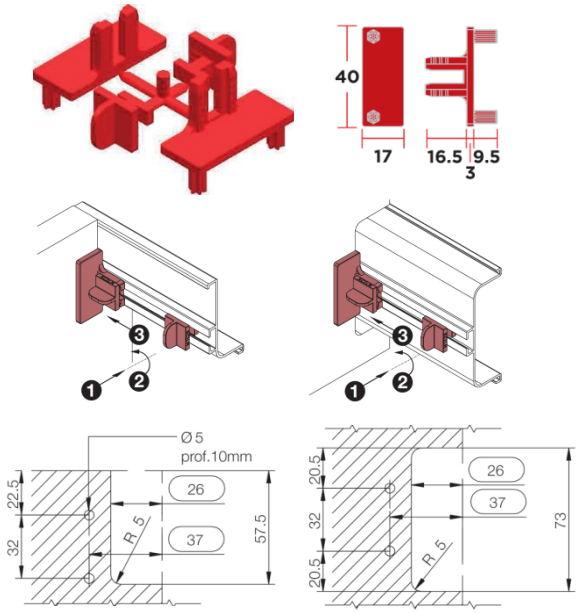


## INSTALLATION

1. Push the connector into the holes created on the side of the carcass

2. Fix the connector into the carcass by screwing or pushing it

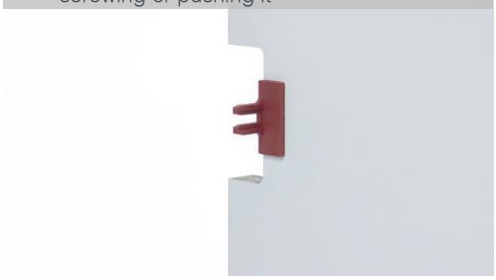

3. Place the Gola Profile alongside the connector

4. Push in the fixing clip in the vertical position

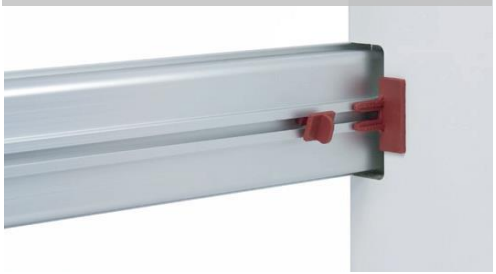

5. Turn the fixing clip in a horizontal position

6. Push the fixing clip into the connector groove to lock the profile in place

| Article no. | 712.63.511 | 712.63.521 |
|---|---|---|
| Mounting | Screw On | Dowel |
| Material | Plastic | |
| Assembly | Tool-free and hassle-free | |
| Purpose | Enables easy mounting and dismounting of the profiles | |
| MRP (INR) | 175/- | 175/- |

Unit: Pair

# HORIZONTAL GOLA PROFILE

## DOOR CALCULATIONS

### Cabinet with Undercounter J Gola Profile

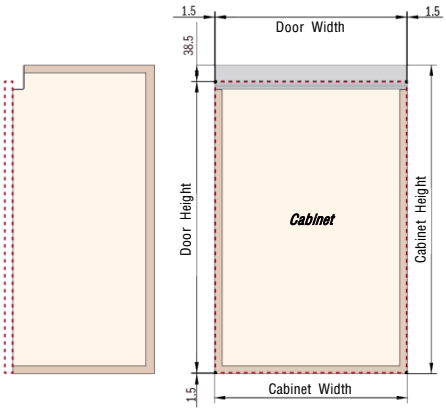


- Door Height = Cabinet Height – 40 mm
- Door Width = Cabinet Width – 3 mm

### Equal-sized High-fronted Drawers with Undercounter J & Drawer Unit C Gola Profiles

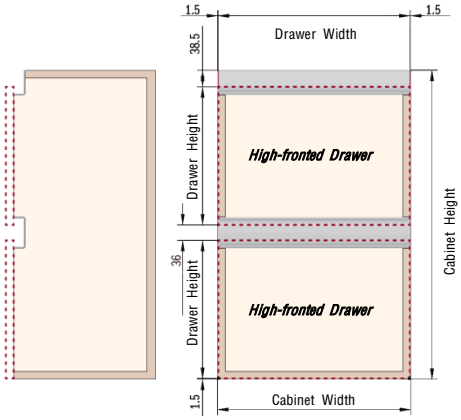


- Drawer Height = (Cabinet Height – 76 mm) / 2
- Drawer Width = Cabinet Width – 3 mm

### 2 Equal-sized Cutlery Drawers and a High-fronted Drawer with Undercounter J & Drawer Unit C Gola Profiles

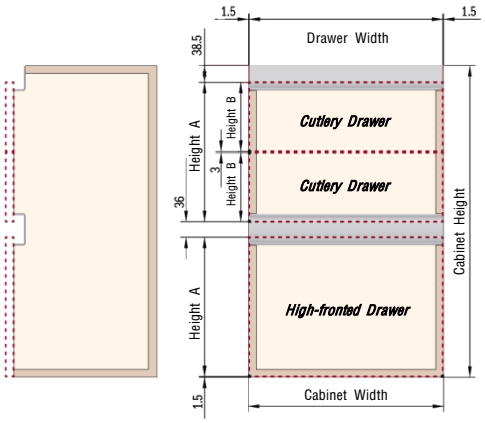


- Drawer Height A = (Cabinet Height – 76 mm) / 2
- Drawer Height B = (Drawer Height A – 3) / 2
- Drawer Width = Cabinet Width – 3 mm

### Equal-sized High-fronted Drawers with Drawer Unit C Gola Profile

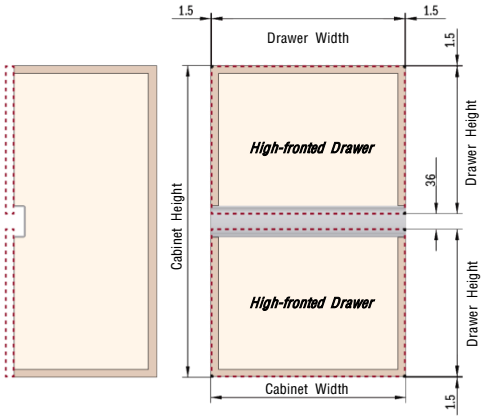


- Drawer Height = (Cabinet Height – 39 mm) / 2
- Drawer Width = Cabinet Width – 3 mm

### 3 Equal, Mid-fronted Drawers with Undercounter J & Drawer Unit C Gola Profiles

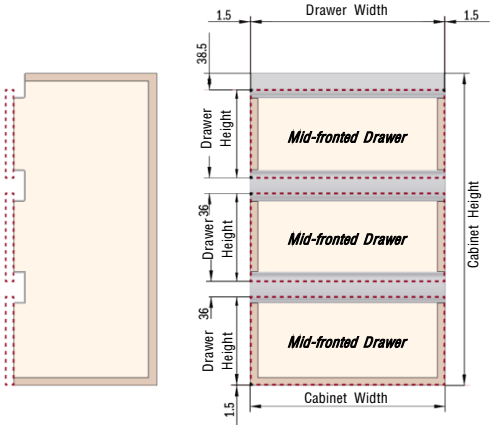


- Drawer Height = (Cabinet Height – 112 mm) / 3
- Drawer Width = Cabinet Width – 3 mm

**Note:** The above mentioned calculations are for reference purposes only. Actual calculations may vary from case-to-case basis.

# HORIZONTAL GOLA PROFILE

- *Profile for Upper Wall Cabinet*

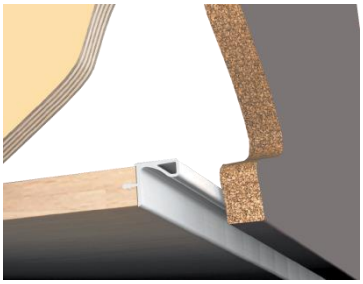

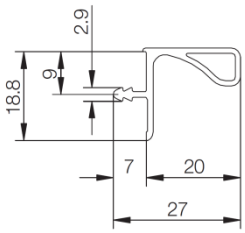


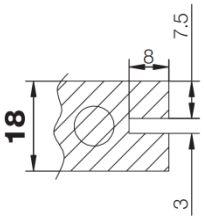


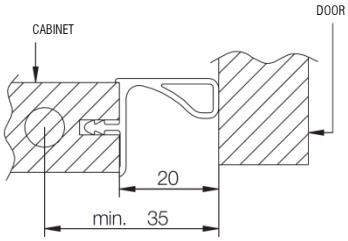


| Article no. | 126.37.736 | 126.37.737 | 126.37.738 | 126.37.739 | 126.37.735 |
|---|---|---|---|---|---|
| Finish | Silver | Graphite | Gold | Rose Gold | Dark Bronze |
| Material | Aluminium | | | | |
| Length | 3000 mm; Usable Length: 2800 mm | | | | |
| MRP (INR) | 1,700/- | 1,700/- | 3,000/- | 3,000/- | 3,000/- |

Unit: Piece

HÄFELE

# VERTICAL GOLA PROFILE

HÄFELE

## VERTICAL GOLA PROFILE

Silver

Graphite

Gold

Rose Gold

Dark Bronze

# VERTICAL GOLA PROFILE

## *Single / Side Snap-on Vertical Gola Profile*

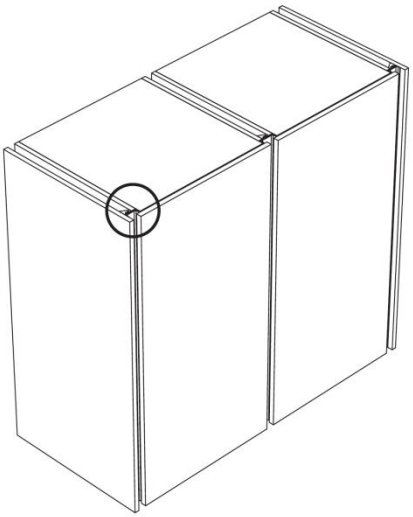

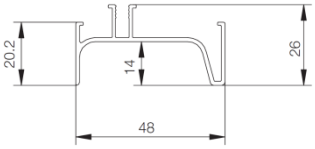


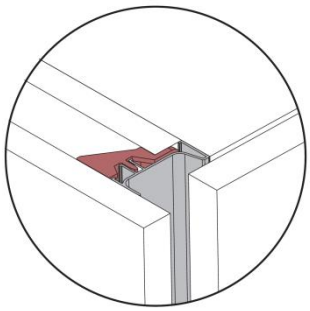

**Note:** These vertical profiles snap onto special brackets, which ensure firm coupling between the two components

| Article no. | 126.37.971 | 126.37.972 | 126.37.973 | 126.37.974 | 126.37.970 |
|---|---|---|---|---|---|
| Finish | Silver | Graphite | Gold | Rose Gold | Dark Bronze |
| Material | Aluminium | | | | |
| Length | 2600 mm; Usable Length: 2400 mm | | | | |
| MRP (INR) | 2,950/- | 2,950/- | 5,000/- | 5,000/- | 5,000/- |

Unit: Piece

## *Double / Intermediate Snap-on Vertical Gola Profile*

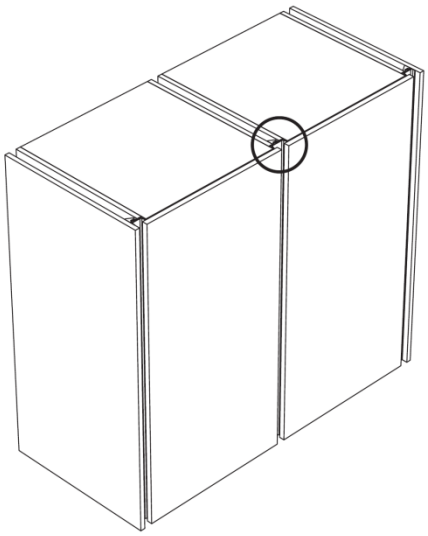

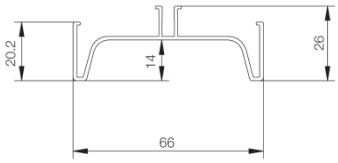


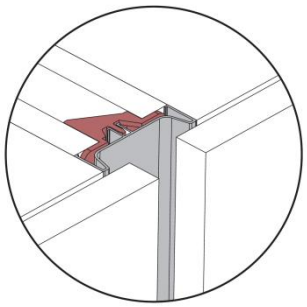

**Note:** These vertical profiles snap onto special brackets, which ensure firm coupling between the two components

| Article no. | 126.37.946 | 126.37.947 | 126.37.948 | 126.37.949 | 126.37.945 |
|---|---|---|---|---|---|
| Finish | Silver | Graphite | Gold | Rose Gold | Dark Bronze |
| Material | Aluminium | | | | |
| Length | 2600 mm; Usable Length: 2400 mm | | | | |
| MRP (INR) | 3,350/- | 3,350/- | 5,500/- | 5,500/- | 5,500/- |

Unit: Piece

# VERTICAL GOLA PROFILE

## *Oven Protector for Side & Intermediate Vertical Gola Profiles*

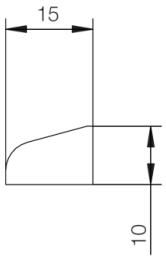


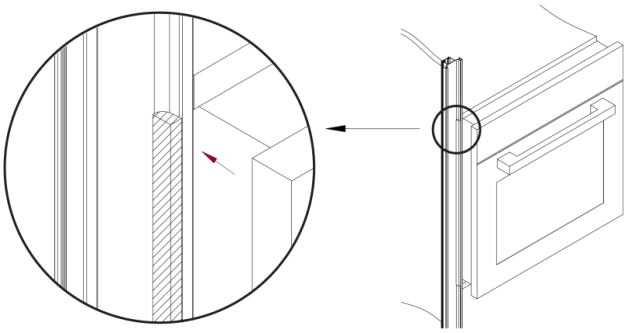

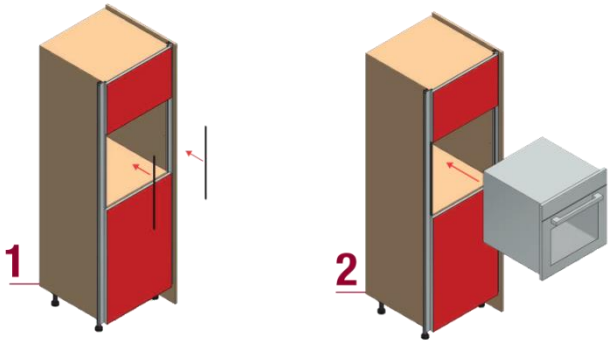


| Article no. | 126.36.218 | 126.36.219 | 126.36.220 | 126.36.221 | 126.36.217 |
|---|---|---|---|---|---|
| Finish | Silver | Graphite | Gold | Rose Gold | Dark Bronze |
| Material | Aluminium | | | | |
| Length | 580 mm | | | | |
| Purpose | Prevents accidentally dislodging the built-in oven / microwave from its place | | | | |
| MRP (INR) | 2,900/- | 2,900/- | 4,400/- | 4,400/- | 4,400/- |

Unit: Piece

## *Brackets for Side and Intermediate Snap-on Vertical Gola Profile*

For Side Snap-on Gola Profile

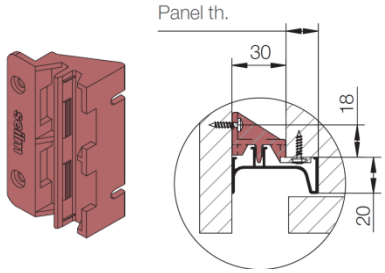


For Intermediate Snap-on Gola Profile

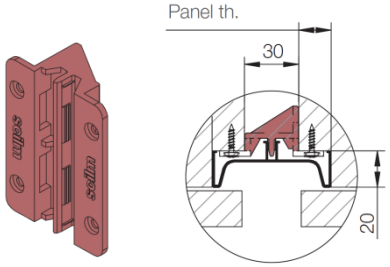


**Note:** The fixing of these brackets is on the front edge thereby eliminating the need of internal screwing and providing cleaner aesthetics inside the cabinet.

| Article no. | 126.37.965 | 126.37.966 |
|---|---|---|
| Application | For Side Snap-on Vertical Gola Profile | For Intermediate Snap-on Vertical Gola Profile |
| Material | Plastic | |
| Purpose | Enables easy installation as the profiles simply snap into the brackets – no screwing required | |
| MRP (INR) | 250/- | 250/- |

Unit: Piece

# VERTICAL GOLA PROFILE

- *Rear Brackets for Side and Intermediate Snap-on Vertical Gola Profile*

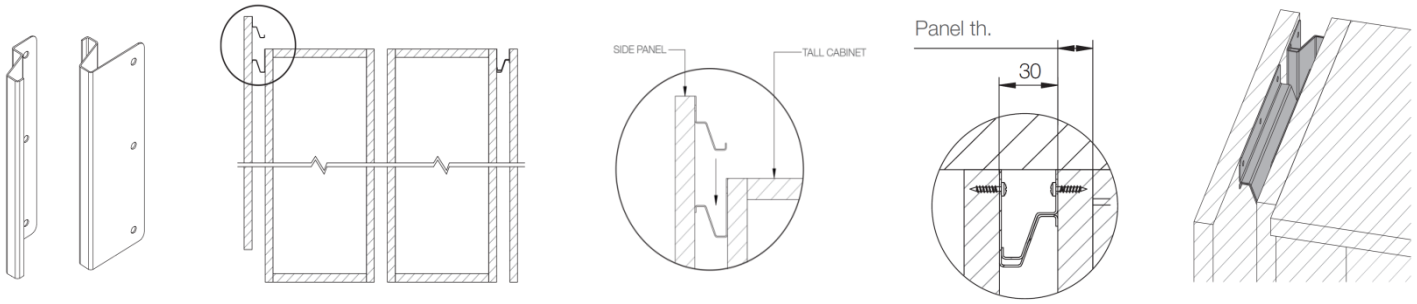


| | |
|---|---|
| Article no. | 126.37.967 |
| Material | Steel |
| Purpose | These brackets together with the brackets for Snap-on Gola Profiles help maintain a uniform gap between two cabinets or help support the side panel (need to be installed horizontally) |
| MRP (INR) | 400/- |

Unit: Pair

## INSTALLATION

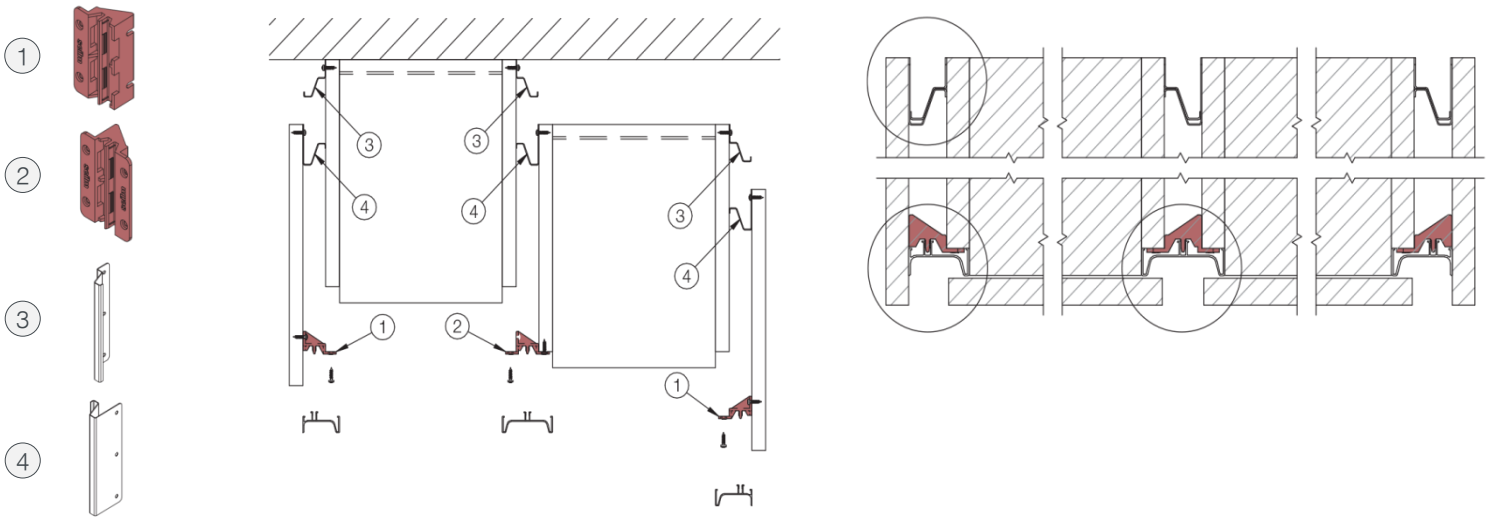


## HINGE INSTALLATION DETAILS

- The gap between holes for installing a Cross Mounting Plate and Straight Mounting Plate should be 37 mm and 20-22 mm respectively from the front of the unit
- Hinges with Cross Mounting Plates should hence always be used with Gola Profiles
- Straight Mounting Plates can only be used on side panels without a Gola Profile

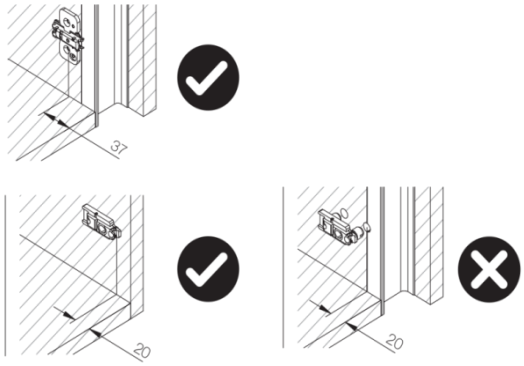

# STACK MODULAR SHELVING

## *For Decorative Open Shelving System*

A new design concept of open shelving / cabinet systems is emerging. More and more enclosed storage areas in the kitchen seem to be fading into this new design concept. The open spaces are increasingly being used as platforms to showcase kitchenware, curated statement pieces of art or accessories.

Häfele presents its Profin Range of Stack Modular Shelving Profiles that shapes your entire furniture aesthetics while silently delivering strength, stability and function to the units. These profiles and their accessories enable construction of open shelves with glass or wood and emanate elegance with their sleek and faultless built and finish.

LA CUCINA ITALIANA
LA CUCINA ITALIANA

HÄFELE

HÄFELE

# STACK MODULAR SHELVING

Silver

Graphite

Gold

Rose Gold

Dark Bronze

# STACK MODULAR SHELVING

## COMPONENTS

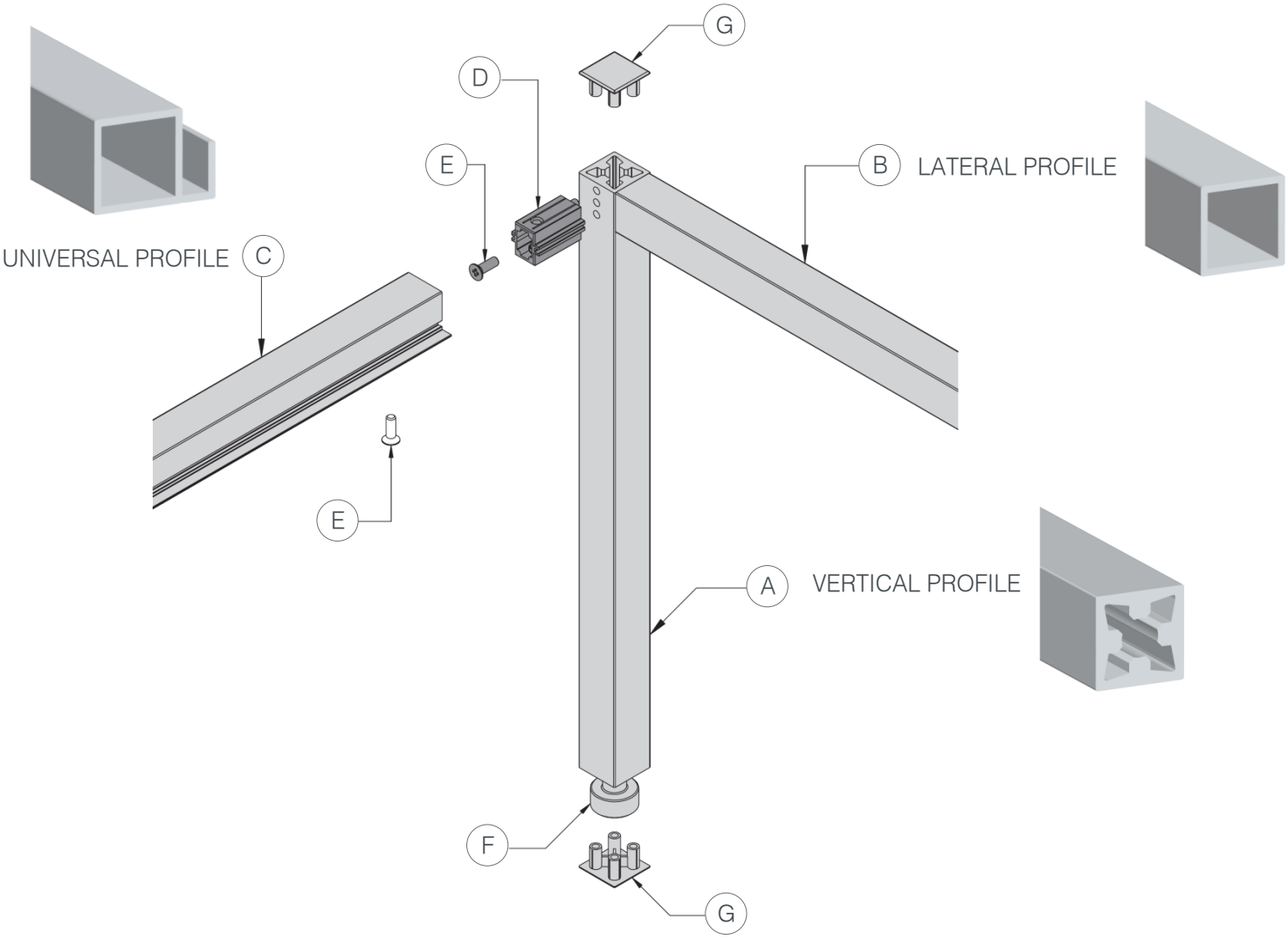


D & E JOINING BLOCK AND UNIVERSAL SCREW

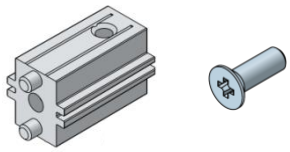

F LEVELER

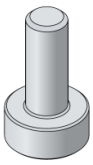

G COVER CAP

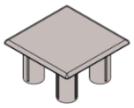

# STACK MODULAR SHELVING

## A. *Vertical Profile*

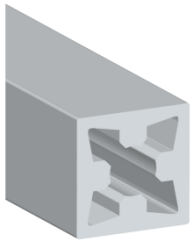

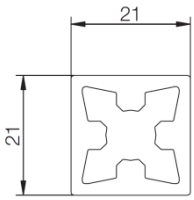


| Article no. | 793.10.902 | 793.10.302 | 793.10.502 | 793.10.402 | 793.10.102 |
|---|---|---|---|---|---|
| Finish | Silver | Graphite | Gold | Rose Gold | Dark Bronze |
| Material | Aluminium | | | | |
| Length | 2670 mm; Usable Length: 2450 mm | | | | |
| MRP (INR) | 4,100/- | 4,100/- | 5,750/- | 5,750/- | 5,750/- |

Unit: Piece

## B. *Lateral Profile*

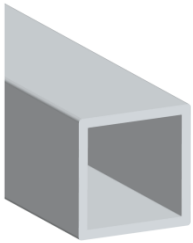

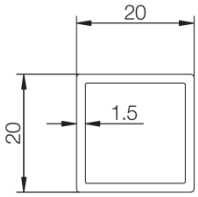


| Article no. | 793.10.912 | 793.10.312 | 793.10.512 | 793.10.412 | 793.10.112 |
|---|---|---|---|---|---|
| Finish | Silver | Graphite | Gold | Rose Gold | Dark Bronze |
| Material | Aluminium | | | | |
| Length | 2670 mm; Usable Length: 2450 mm | | | | |
| MRP (INR) | 2,900/- | 2,900/- | 4,250/- | 4,250/- | 4,250/- |

Unit: Piece

## C. *Universal Profile*

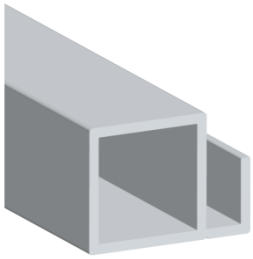

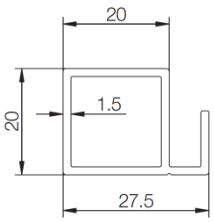


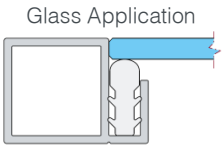


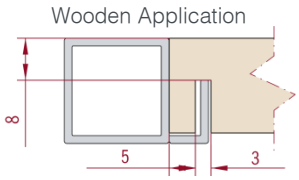


| Article no. | 793.10.922 | 793.10.322 | 793.10.522 | 793.10.422 | 793.10.122 |
|---|---|---|---|---|---|
| Finish | Silver | Graphite | Gold | Rose Gold | Dark Bronze |
| Material | Aluminium | | | | |
| Length | 2670 mm; Usable Length: 2450 mm | | | | |
| MRP (INR) | 2,900/- | 2,900/- | 4,250/- | 4,250/- | 4,250/- |

Unit: Piece

# STACK MODULAR SHELVING

## ACCESSORIES FOR PROFILES

### D. *Joining Block for Profile & Drilling Template for Vertical Profile*

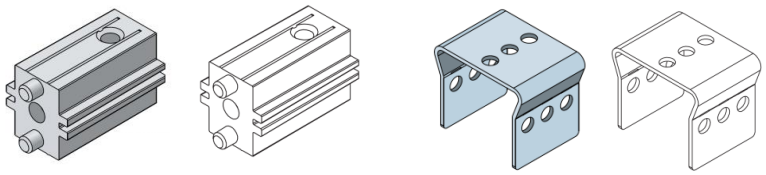

| Article no. | 793.10.991 | 793.10.996 |
|---|---|---|
| | Joining Block | Drilling Template |
| Finish | Zinc Plated | Nickel Plated |
| Material | Aluminium Die-cast | Steel |
| MRP (INR) | 225/- | 1,250/- |

Unit: Piece

### E. *Universal Screw*

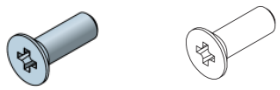

| Article no. | 793.10.992 | 793.10.993 | 793.10.994 |
|---|---|---|---|
| Finish | Darkened | Nickel Plated | Zinc Plated |
| MRP (INR) | 15/- | 15/- | 15/- |

Unit: Piece

### F. *Leveler*

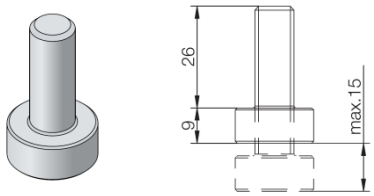


Adjustable leg Ø 20 mm, thread M10

| Article no. | 793.10.995 |
|---|---|
| Finish | Nickel Plated |
| Material | Steel |
| MRP (INR) | 1,100/- |

Unit: Piece

### G. *Cover Cap*

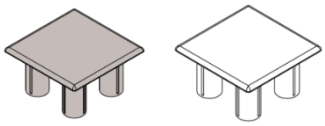

| Article no. | 793.10.990 | 793.10.390 | 793.10.590 | 793.10.490 | 793.10.190 |
|---|---|---|---|---|---|
| Finish | Silver | Graphite | Gold | Rose Gold | Dark Bronze |
| Material | Plastic | | | | |
| MRP (INR) | 250/- | 250/- | 300/- | 300/- | 300/- |

Unit: Piece

### H. *Gasket for Glass Shelves*

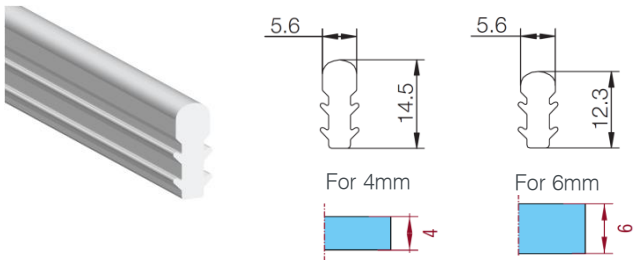


| Article no. | 793.10.980 | 793.10.981 |
|---|---|---|
| For Glass Thickness | 4mm | 6mm |
| Material | Rubber | |
| MRP (INR) | 175/- | 175/- |

Unit: 1 Meter

# STACK MODULAR SHELVING

## DRILLING DETAILS

### For Lateral and Universal Profile

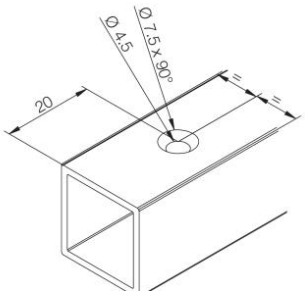


### For Vertical Profile

*By Drawing*

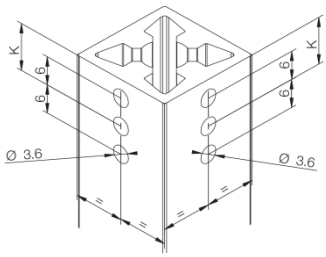


K = 8.7 mm with an end cap at the top
K = 9.7 mm without an end cap at the top

*By Template*

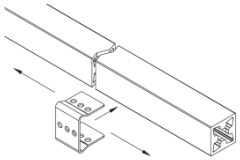

Step 1 : Position the template on the profiles

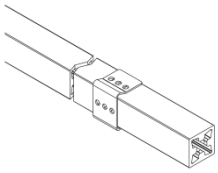

Step 2 : Mark the holes, remove the template, drill the profile.

## MOUNTING & CONSTRUCTION DETAILS

### For Freestanding Application

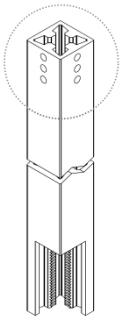

We recommend the use of levelers for a freestanding application. In this case, to install the leveler, thread a M10 hole with a 30 mm depth into the lower part of the vertical profile.

## CALCULATIONS

### For Glass / Wood

- Shelf Depth = Structure Depth – 42mm
- Shelf Width = Structure Width – 42mm

**Note:** The Stack Profiles give you the freedom to design the structure as per your requirement, with no depth, height or width restrictions. It is therefore not possible for us to ascertain the maximum weight carrying capacity. This needs to be determined by the fabricator depending on the dimensions of the structure. These Profiles are not meant for heavy shelving.

### For Wall Mounting Application

- *Method 1*

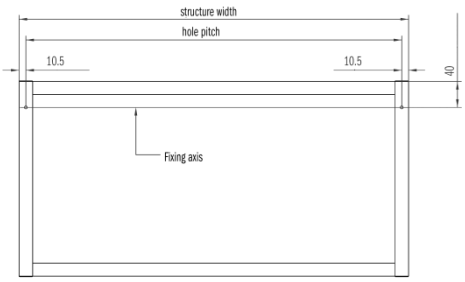


Drill holes of ø 4.5 mm on the vertical profile in the position demonstrated in the drawing. The type of hole to be drilled depends on the fixing screw - Type A or Type B (details on the next page).

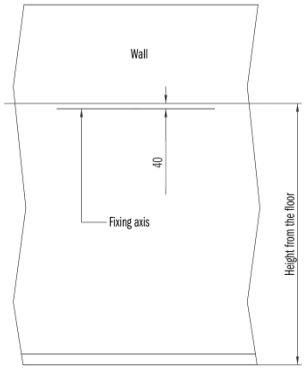


- Mark the height on the wall from the floor, where you want to mount the structure
- Mark the fixing axis and the hole pitch
- Drill holes into the wall

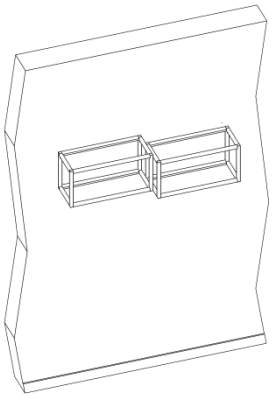

# STACK MODULAR SHELVING

## DRILLING DETAILS

Type A – Countersunk Hole

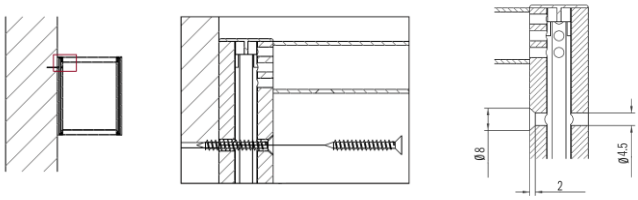


- In Type A, the countersunk screw secures the structure to the wall and flushes in line with the profile
- The screw head will be visible
- No adjustments are possible

Type B – Double Diameter Hole

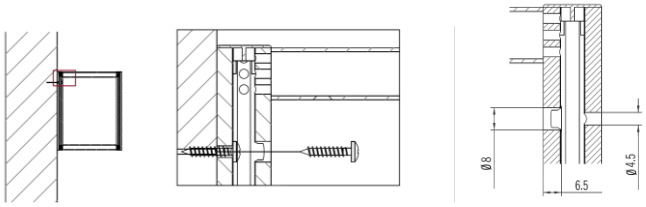


- In Type B, a through hole of diameter 4.5 mm is drilled into the profile. Another hole of diameter 8 mm with a depth of 6.5 mm is drilled into the front part of the back vertical profile
- The dome-head screw passes through the bigger hole into the diameter 4.5 mm hole and secures the structure to the wall
- The screw head will not be visible (if a cover cap is used to conceal the diameter 8 mm hole)
- Adjustment of 1 mm will be possible

- *Method 2*

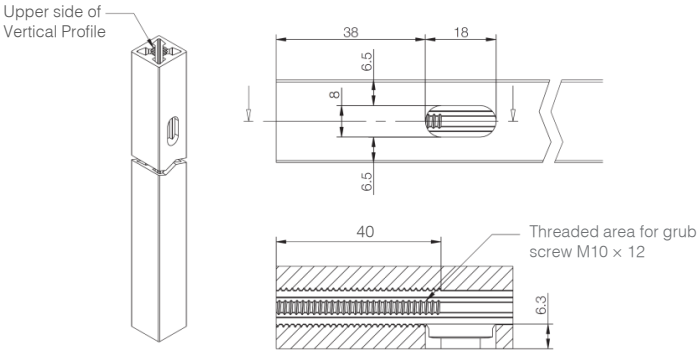


- Thread the Vertical Profile from the top to a height of 40 mm
- Cut an oval hole as per the dimensions provided in the diagram

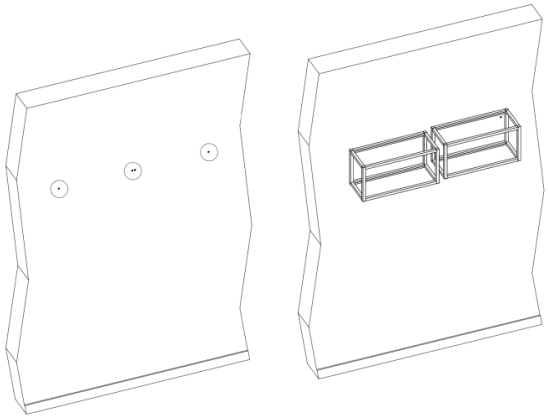

- Drill holes in the wall using a diameter 6 mm drill bit to a minimum depth of 40 mm
- Insert the dowels (not included in the offering) in the holes drilled
- Fix the curved hooks (not included in the offering) into the dowel

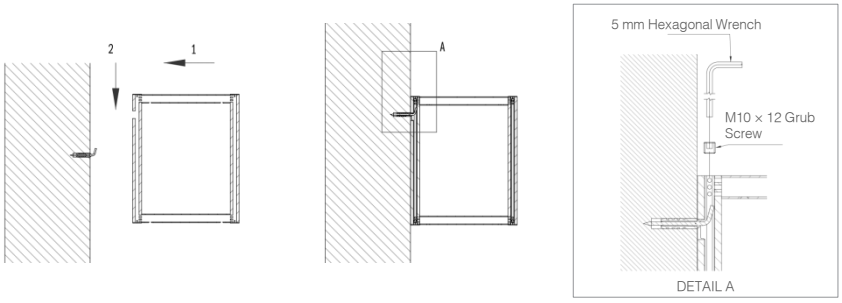


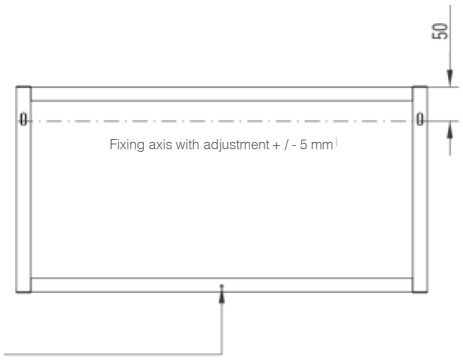


- Bring the assembled structure close to the wall and engage it with the curved hooks
- Once the structure is engaged with the hooks, adjust it to the desired height (can be adjusted to + / - 5mm) and insert the grub screws (not included in the offering) along the threaded rear vertical profiles from the upper side via a hexagonal wrench to tighten the grip and hold the hooks firmly in place

- Once hooked firmly, secure the structure to the wall with a normal screw through the hole (Type A or B) made in the universal profile

# RAIL DOOR PROFILES

## *Decorative Cabinet Doors*

Overhead cabinets and tall units are a must in any kitchen, especially in an open kitchen. These systems optimally utilize spaces available within kitchens and can effectively store bulk quantities of food (non-refrigerated) and other kitchen items in an organized way. To impart a similar grace to these systems as your handle-less furniture and open shelving units, Häfele brings to you its Profin Range of Rail Door Profiles. These profiles meander naturally forming innate grooves for the handles and border the glass to perfection thereby crafting timeless designs that never run out of fashion.

HÄFELE

HÄFELE

45˚ Connection

90˚ Connection

## RAIL DOOR PROFILES

Silver

Graphite

Gold

Rose Gold

Dark Bronze

# RAIL DOOR PROFILES

## A. *Door Profile (thick )*

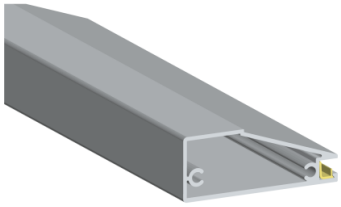

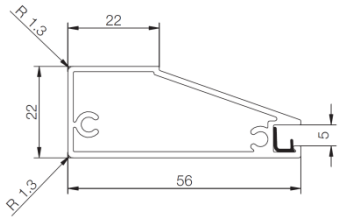


| Article no. | 563.97.913 | 563.97.313 | 563.97.513 | 563.97.413 | 563.97.113 |
|---|---|---|---|---|---|
| Finish | Silver | Graphite | Gold | Rose Gold | Dark Bronze |
| Material | Aluminium | | | | |
| Length | 3000 mm; Usable Length: 2800 mm | | | | |
| For glass thickness | 4 mm | | | | |
| MRP (INR) | 5,200/- | 5,300/- | 8,400/- | 8,400/- | 8,400/- |

Unit: Piece

## B. *Door Profile (thin)*

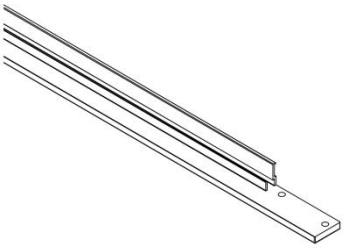

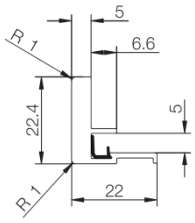


| Finish | Article no. | Length | Material | MRP (INR) |
|---|---|---|---|---|
| Silver | 563.97.915 | 448 mm | Aluminium | 2,850/- |
| | 563.97.916 | 598 mm | Aluminium | 3,150/- |
| | 563.97.917 | 898 mm | Aluminium | 3,400/- |
| | 563.97.918 | 1198 mm | Aluminium | 3,500/- |
| Graphite | 563.97.315 | 448 mm | Aluminium | 2,850/- |
| | 563.97.316 | 598 mm | Aluminium | 3,150/- |
| | 563.97.317 | 898 mm | Aluminium | 3,400/- |
| | 563.97.318 | 1198 mm | Aluminium | 3,500/- |
| Gold | 563.97.515 | 448 mm | Aluminium | 4,300/- |
| | 563.97.516 | 598 mm | Aluminium | 5,000/- |
| | 563.97.517 | 898 mm | Aluminium | 5,200/- |
| | 563.97.518 | 1198 mm | Aluminium | 5,500/- |
| Rose Gold | 563.97.415 | 448 mm | Aluminium | 4,300/- |
| | 563.97.416 | 598 mm | Aluminium | 5,000/- |
| | 563.97.417 | 898 mm | Aluminium | 5,200/- |
| | 563.97.418 | 1198 mm | Aluminium | 5,500/- |
| Dark Bronze | 563.97.115 | 448 mm | Aluminium | 4,300/- |
| | 563.97.116 | 598 mm | Aluminium | 5,000/- |
| | 563.97.117 | 898 mm | Aluminium | 5,200/- |
| | 563.97.118 | 1198 mm | Aluminium | 5,500/- |

Unit: Piece

# RAIL DOOR PROFILES

## C. *Handle for Door Profile (thick) & Handle Screw*

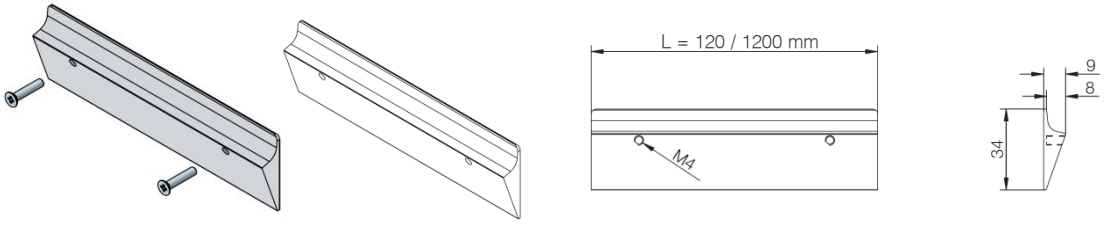


| Finish | Article no. | Length | Material | MRP (INR) |
|---|---|---|---|---|
| Silver | 563.97.921 | 120 mm | Aluminium | 1,200/- |
| | 563.97.931 | 1200 mm | Aluminium | 2,400/- |
| Graphite | 563.97.321 | 120 mm | Aluminium | 1,200/- |
| | 563.97.331 | 1200 mm | Aluminium | 2,400/- |
| Gold | 563.97.521 | 120 mm | Aluminium | 1,700/- |
| | 563.97.531 | 1200 mm | Aluminium | 3,550/- |
| Rose Gold | 563.97.421 | 120 mm | Aluminium | 1,700/- |
| | 563.97.431 | 1200 mm | Aluminium | 3,550/- |
| Dark Bronze | 563.97.121 | 120 mm | Aluminium | 1,700/- |
| | 563.97.131 | 1200 mm | Aluminium | 3,550/- |

Unit: Piece

| Article no. | 563.97.995 | 563.97.996 |
|---|---|---|
| Finish | Zinc Plated | Darkened |
| MRP (INR) | 8/- | 8/- |

Unit: Piece

## D. *45° Corner Connector & Screw*

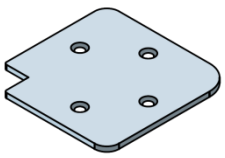

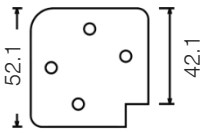


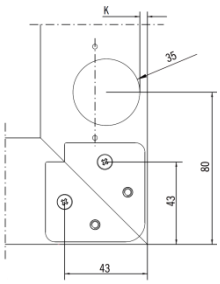


| Article no. | 563.97.997 |
|---|---|
| Finish | Zinc Plated |
| Material | Steel |
| MRP (INR) | 100/- |

Unit: Piece

| Article no. | 563.97.993 | 563.97.994 |
|---|---|---|
| Finish | Zinc Plated | Darkened |
| MRP (INR) | 5/- | 5/- |

Unit: Piece

## E. *90° Connection Screw*

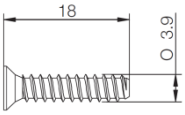


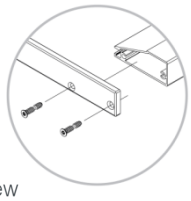

**Note:** Use a T15 Standard Torx Screwdriver with this screw

| Article no. | 563.97.991 | 563.97.992 |
|---|---|---|
| Finish | Zinc Plated | Darkened |
| MRP (INR) | 7/- | 7/- |

Unit: Piece

# RAIL DOOR PROFILES

## INSTALLATION

### For 90˚ Connection

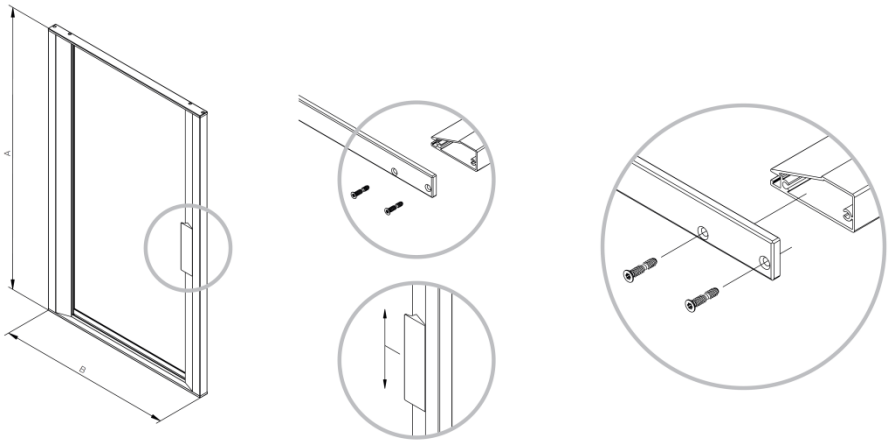


1. Cut the thick door profile to desired length
   *Length of the thick profile = Door length – 10mm*
2. Insert a 4 mm glass panel into the profile
3. Using the 90° connection screws, fix the thin door profile to the thick door profile
4. Fix the handle

### For 45˚ Connection

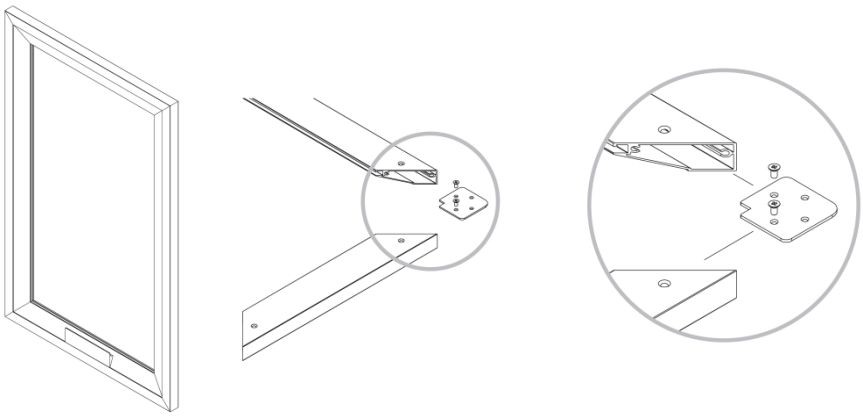

1. Mitre the thick door profiles and cut them to the desired length
2. Insert the 45˚ connector and using the screws build the frame on three sides
3. Slide in a 4 mm glass panel into the profile frame
4. Enclose the glass by adding in the profile on the fourth side and fixing it in place with the connector and screws
5. Fix the handle

## GLASS SIZE CALCULATION

### For 90˚ Connection

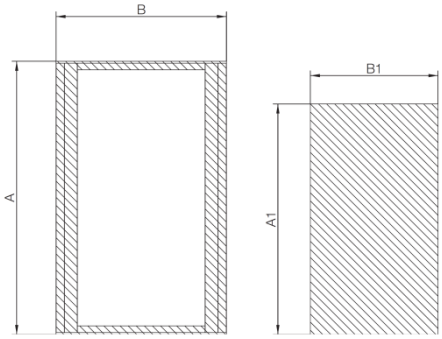


- A1 = A-13
- B1 = B-102

### For 45˚ Connection

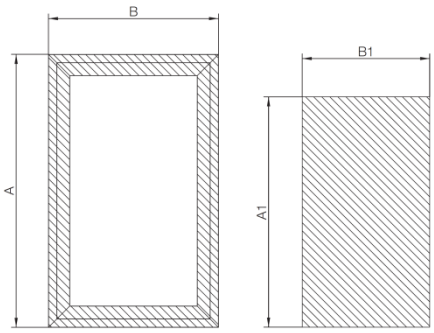


- A1 = A-102
- B1 = B-102

# STRIKE SHELVING SYSTEM

## *Decorative Shelves*

What's on the inside is as important as what lies on the outside. Häfele introduces its Profin Range of Strike Aluminium Profiles for shelves inside cabinets and tall units. These profiles are a brilliant way to complete the look of your interiors and add ambience, functionality and style to your furniture. The front profile, designed with modularity in concept, includes a groove to include LED strip lights which help illuminate the insides of the cabinet with indicative and directional lighting. These lights can be combined with drivers and sensors so that every time the shutter opens, the lights inside switches on.

HÄFELE

HÄFELE

# STRIKE SHELVING SYSTEM

Silver

Graphite

Gold

Rose Gold

Dark Bronze

# STRIKE SHELVING SYSTEM

## COMPONENTS

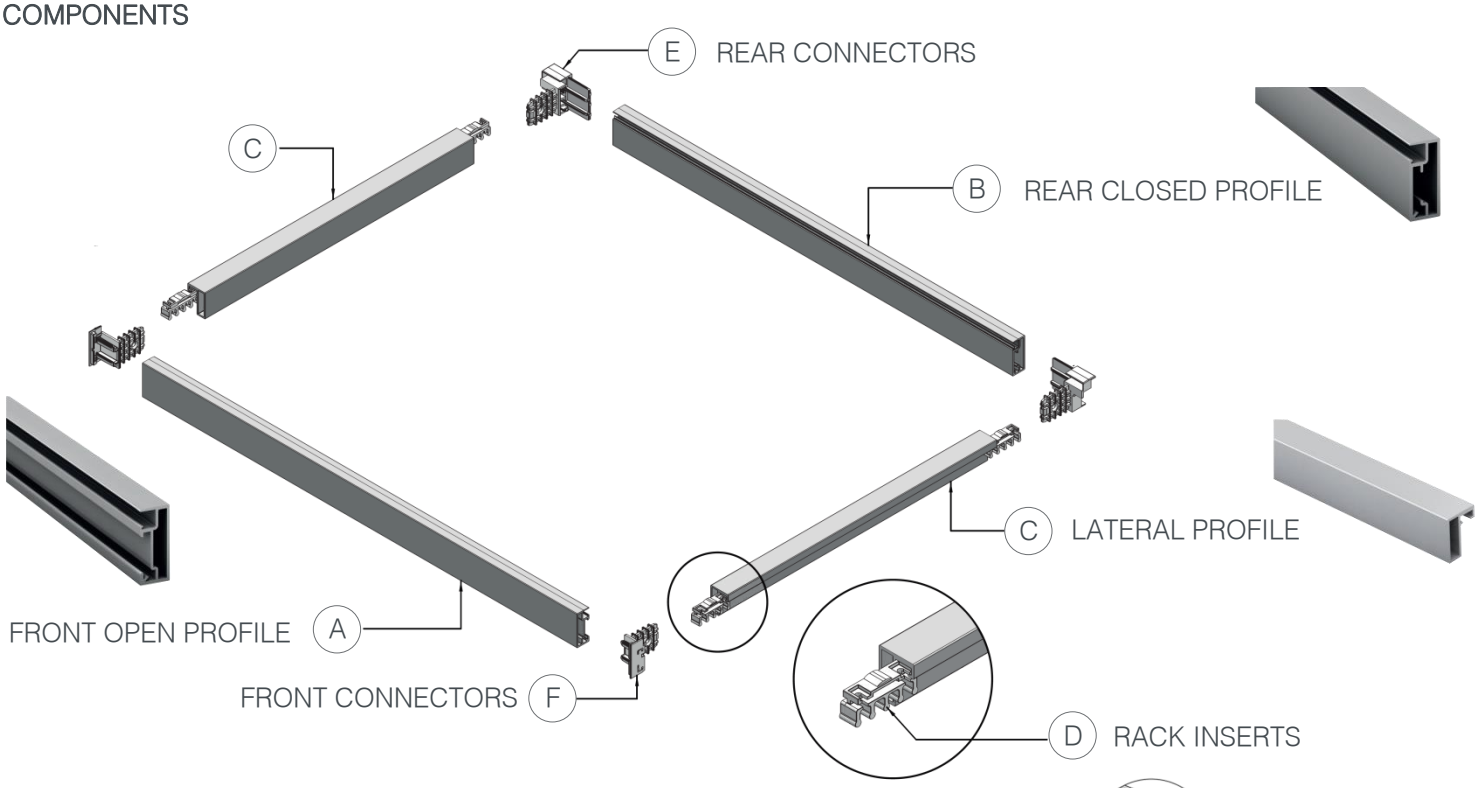


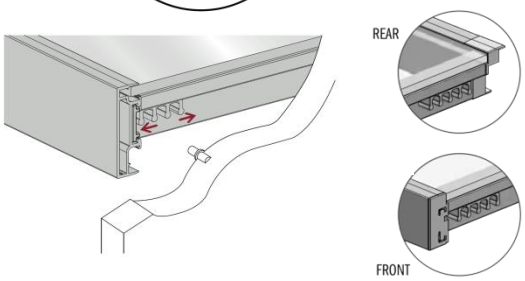


**Note:** The Rack Inserts placed in lateral profiles interlock with the shelf supports and allow a quick and easy assembly regardless to the position of the shelf supports on the cabinet.

## KIT 1

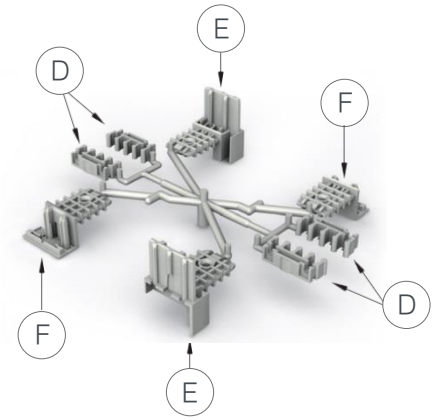


**KIT 1 :** You should order KIT 1 when you use the Front Open Profile together with the Rear Closed Profile. The KIT 1 consists of:

D. Rack Inserts (4)
E. Rear Connectors (2)
F. Front Connectors (2)

## KIT 2

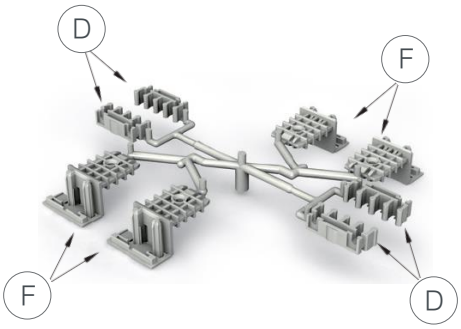


**KIT 2 :** You should order KIT 2 when you use the Front Open Profile in the front as well as at the back (instead of a Rear Closed Profile). The KIT 2 consists of:

D. Rack Inserts (4)
F. Front Connectors (4)

## APPLICATION

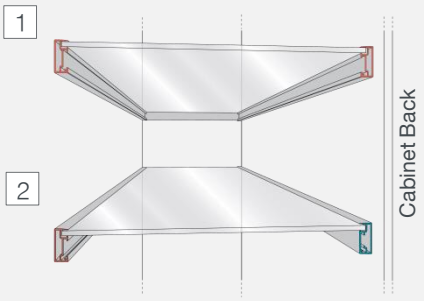


1 Strike shelf with Front Open Profiles in the front and at the back. For this application, KIT 2 needs to be ordered

2 Strike shelf with Front Open Profile in the front and Rear Closed Profile at the back. For this application, KIT 1 needs to be ordered

**Note:** We recommend using the Front Open Profile with the Rear Closed Profile for a clean aesthetic look.

HÄFELE

## STRIKE SHELVING SYSTEM

### A. *Front Open Profile*

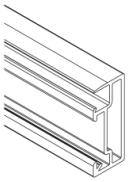

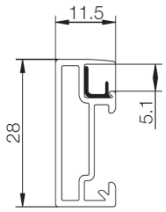


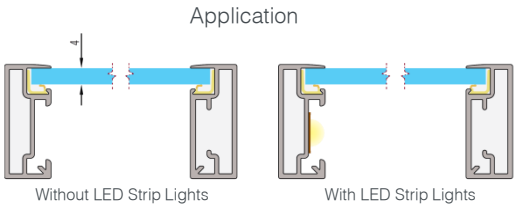


| Article no. | 126.36.200 | 126.36.204 | 126.36.202 | 126.36.203 | 126.36.201 |
|---|---|---|---|---|---|
| Finish | Silver | Graphite | Gold | Rose Gold | Dark Bronze |
| Material | Aluminium | | | | |
| Length | 2670 mm; Usable Length: 2470 mm | | | | |
| Application | • With or without LED strip lights (LED Strip Lights to be ordered separately)<br>• Can be used in the front as well as at the back | | | | |
| For glass thickness | 4 mm | | | | |
| MRP (INR) | 2,300/- | 2,300/- | 4,750/- | 4,750/- | 4,750/- |

Unit: Piece

### B. *Rear Closed Profile*

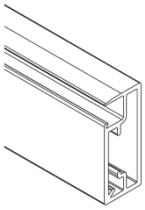

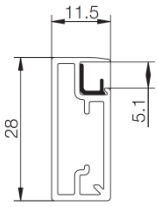


| Article no. | 126.36.205 | 126.36.209 | 126.36.207 | 126.36.208 | 126.36.206 |
|---|---|---|---|---|---|
| Finish | Silver | Graphite | Gold | Rose Gold | Dark Bronze |
| Material | Aluminium | | | | |
| Length | 2670 mm; Usable Length: 2470 mm | | | | |
| Application | Can be used only at the back | | | | |
| For glass thickness | 4 mm | | | | |
| MRP (INR) | 2,400/- | 2,400/- | 4,800/- | 4,800/- | 4,800/- |

Unit: Piece

### C. *Lateral Profile*

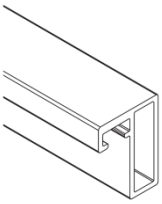

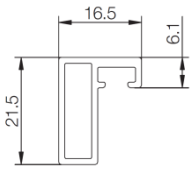


| Article no. | 126.36.210 | 126.36.214 | 126.36.212 | 126.36.213 | 126.36.211 |
|---|---|---|---|---|---|
| Finish | Silver | Graphite | Gold | Rose Gold | Dark Bronze |
| Material | Aluminium | | | | |
| Length | 2670 mm; Usable Length: 2470 mm | | | | |
| MRP (INR) | 600/- | 600/- | 1,375/- | 1,375/- | 1,375/- |

Unit: Piece

# STRIKE SHELVING SYSTEM

## ACCESSORIES

### *D. E. & F. Rack Inserts, Front Connectors & Rear Connectors*

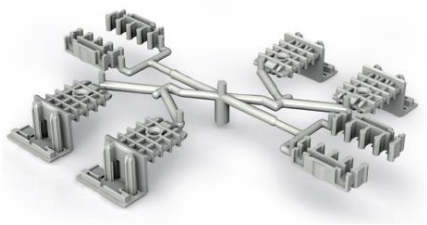

| Article no. | 126.36.216 | 126.36.215 |
|---|---|---|
| | KIT 1 | KIT 2 |
| Application | Strike shelf with Front Open Profile in the front and Rear Closed Profile at the back | Strike shelf with Front Open Profiles in the front and at the back |
| Consists of | 2 × Rack Inserts<br>2 × Front Connectors<br>2 × Rear Connectors | 2 × Rack Inserts<br>4 × Front Connectors |
| Finish | Grey | |
| Material | Plastic | |
| MRP (INR) | 250/- | 250/- |

Unit: Kit

### *G. Shelf Support*

| Article no. | 282.43.750 |
|---|---|
| Finish | Nickel Plated |
| Material | Steel |
| MRP (INR) | 90/- |

Unit: Piece

## WEIGHT CARRYING CAPACITY DETAILS

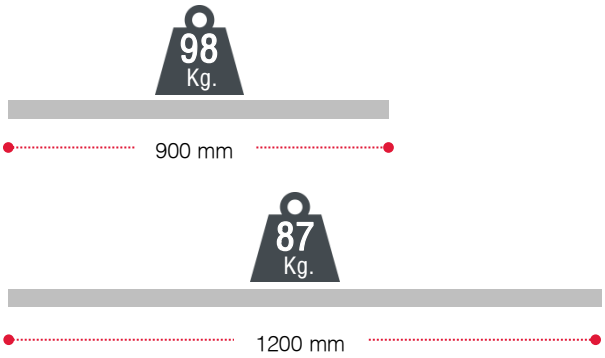


Note:

- The weight carrying capacity is for reference purposes only and is limited to a shelf depth of 500 mm only
- The weight capacity includes the weight of the hardware as well as the weight of the shelf

# STRIKE SHELVING SYSTEM

## CALCULATIONS

### For cutting the Strike profiles

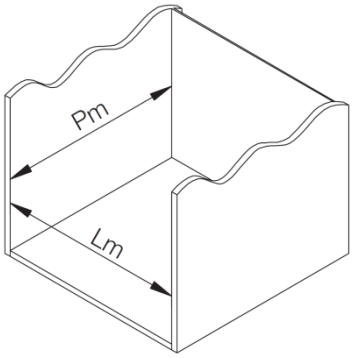


- Front Open Profile = Internal Cabinet Width (Lm) – 2 mm
- Closed Rear Profile = Internal Cabinet Width (Lm) – 34 mm
- Lateral Profile = Internal Cabinet Depth (Pm) – 26 mm

### For glass dimensions

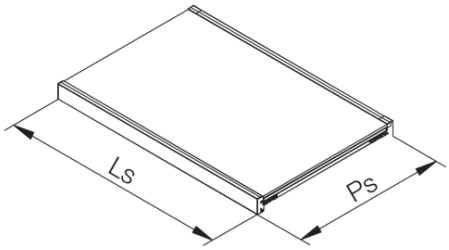


- Glass Width = Total Width of Shelf (Ls) – 2 mm
- Glass Depth = Total Depth of Shelf (Ps) – 13 mm

## LED STRIP LIGHTS CONFIGURATION

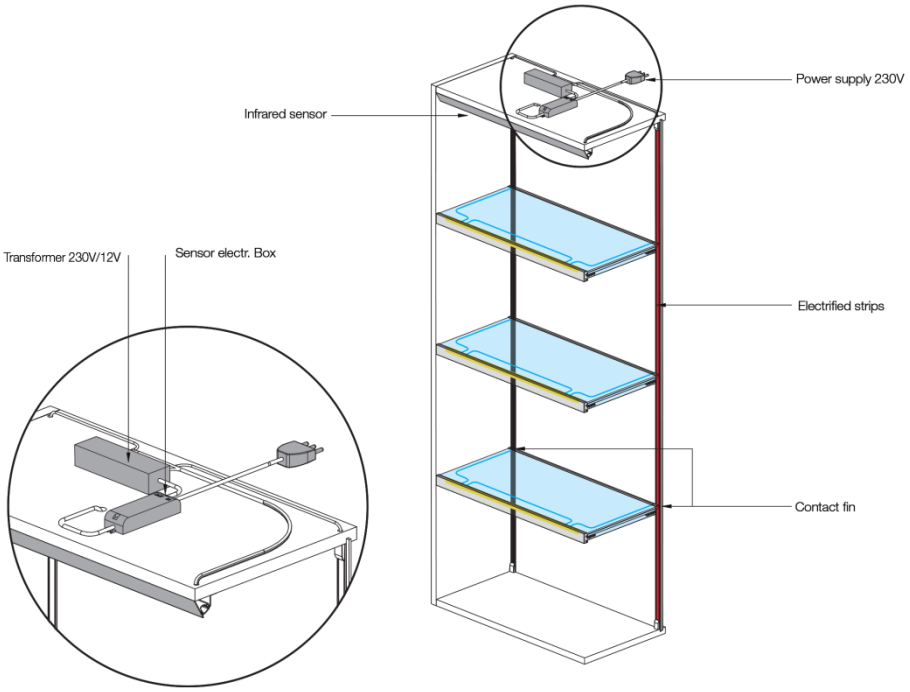


**Note:** Please refer to the Häfele Loox Lighting Catalogue for choosing the appropriate LED Strip Lights, Drivers, Sensors, Transformers etc.

HÄFELE

**Häfele India Private Limited** | Office No. 3, Building "A", BETA, I Think Techno Campus, Off J.V.L.R, Opp. Kanjurmarg East, Mumbai – 400 042. | Tel.: 022 6142 6100 | Fax: 022 6702 0531
New Delhi | Kolkata | Chennai | Hyderabad | Bangalore | Pune | Ahmedabad | Srilanka | Bangladesh | Nepal

Toll Free Customer Care No.:1800 266 6667 | SMS HAFELE to 56070 | customercare@hafeleindia.com

**www.hafeleindia.com**